DTC	32	Injection Pump Correction System Malfunction

CIRCUIT DESCRIPTION

The supply pump pumps fuel into the injectors. In the correction system, the difference in volume of the pumped fuel among these injectors is corrected.

DTC No.	DTC Detecting Condition	Trouble Area
32	Open or short in injection pump correction unit circuit	• Injection pump correction unit circuit • Injection pump correction unit • Engine ECU

WIRING DIAGRAM

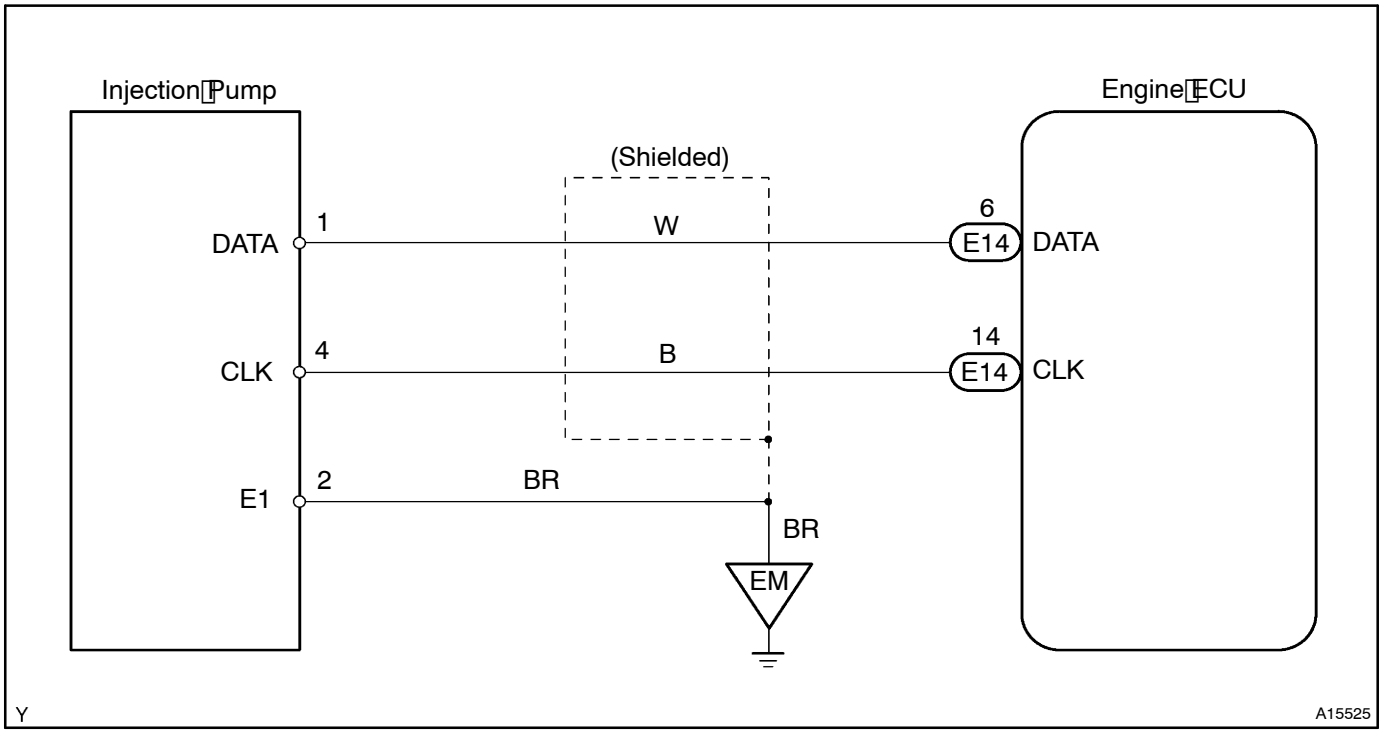

INSPECTION PROCEDURE

1	**Check for open and short in harness and connector between the engine ECU and injection pump correction unit (See page IN–19).**

NG → **Repair harness or connector.**

OK

2	**Replace injection pump correction unit.**

PREPARATION:

(a) Replace the correction unit.
(b) Clear the DTC.
(c) Turn the ignition switch ON.

CHECK:

Read the DTC again.

OK:

DTC 32 is not output.

OK → **Check and replace supply pump (See Pub No. RM817E on page FU–7).**

NG →

Check and replace engine ECU (See page IN–19).